8" 8FHW-2

Mid-Woofer

REDCATT

Key features:

- **MID-WOOFER DESIGNED FOR OUTDOOR OR INDOOR APPLICATIONS**
- **UV STABILIZED POLYPROPYLENE CONE AND RUBBER SURROUND**
- **COMPONENTS ARE TREATED TO SURVIVE HARSH OUTDOOR ENVIRONMENTS**

Design notes:

8FHW was designed as mid-woofer, with extended frequency response to low frequencies, as well as good extension into the mid-frequencies. All parts are intensively treated for outdoor usage, cone, surround material are with UV stabilizers. The used adhesives make sure the driver is waterproof.

The cone utilizes polypropylene material and rubber surround. This combination sports sizable amounts of low frequencies and good behavior in the higher mid-frequencies.

Specifications:

General specs	
Nominal Diameter:	8 "
Rated Impedance:	4 ohm
Power handling	
AES Power:	100 watts
Program Power:	200 watts
Peak Power:	400 watts
Voice Coil	
Diameter:	30.5 mm
Winding wire:	Copper
Former:	Aluminum
Winding height:	15.3 mm

T/S Parameters	
Resonant frequency:	36 Hz
Re:	3.3 ohm
Qes:	0.38
Qms:	4.53
Qts:	0.35
Vas:	34.3 liters
Sd:	213.8 cm²
Sensitivity:	89.12 dB
Mms:	36.59 grams
Bl:	8.6
Le:	0.89 mH

Design details	
Surround Material:	NBR
Cone material:	PP
Spider:	Nomex
Plate thickness:	8 mm
Overall diameter:	209.5 mm
Bolt circle diameter:	197 mm
Baffle cutout dia.:	184.5 mm
Mounting holes:	8
Depth:	86.5 mm
Net weight:	1.5 kg

Ordering codes:

DR-8-022-4R-B2-C0001

Legacy code: **8FHWX4-382**

Recone kits:

RC8FHWX4-382

In many cases REDCATT produces 4, 8 and 16 ohm versions — indicate what impedance you need in your request.

Frequency response & Impedance

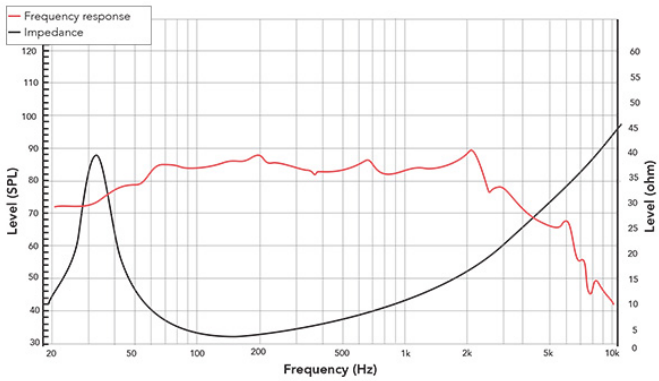

Frequency response measured on IEC baffle

2D drawing

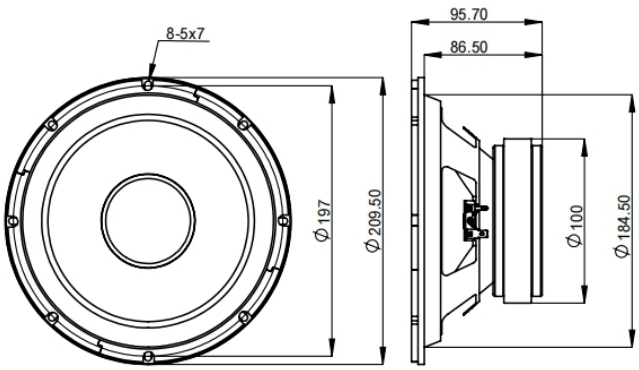

info@redcatt.net

www.redcatt.net