6" 61FHM-1

Mid-Woofer

Key features:

- **EXTENDED FREQUENCY RESPONSE**
- **HARD ANODIZED ALUMINUM CONE, ALUMINUM BASKET**
- **DESIGNED FOR HI-FI AND OUTDOOR APPLICATIONS**

Design notes:

61FHM mid-woofer was designed for outdoor applications, yet it will shine in hi-fi home and studio applications as well.

Optimized ferrite based magnetic circuit with good air-venting features ensures long lasting performance.

Our engineers have chosen hard-anodized cone with rubber surround for this model. Both of these components are produced with UV stabilizers. Furthermore, REDCATT state of the art adhesives and dispensing techniques ensures waterproof seals in all weather exposed glue joints. Sealing to the exposure can be guaranteed by EVA gaskets or based upon a request by Form In Place Gaskets.

The audio system designers can rest assured we have extensively tested this product with UV exposure, salt exposure and waterproofing.

The extended mid-frequency response allows the systems to be used with higher resonance frequency HF units. For the best performance in the audio systems, we recommend usage in sealed enclosures. In this model the aluminum cone further improves the mid-frequency response and lowers the harmonic distortion artifacts.

Specifications:

General specs	
Nominal Diameter:	**6 "**
Rated Impedance:	**8 ohm**
Power handling	
AES Power:	**60 watts**
Program Power:	**120 watts**
Peak Power:	**240 watts**
Voice Coil	
Diameter:	**38 mm**
Winding wire:	**CCAW**
Former:	**Glass Fiber**
Winding height:	**17.6 mm**

T/S Parameters	
Resonant frequency:	**37 Hz**
Re:	**5.8 ohm**
Qes:	**0.52**
Qms:	**11.01**
Qts:	**0.49**
Vas:	**28.2 liters**
Sd:	**132.7 cm²**
Sensitivity:	**87.77 dB**
Mms:	**16.4 grams**
Bl:	**6.6**
Le:	**0.4 mH**

Design details	
Surround Material:	**NBR**
Cone material:	**Aluminum**
Spider:	**Nomex**
Plate thickness:	**5 mm**
Overall diameter:	**181.5 mm**
Bolt circle diameter:	**169.5 mm**
Baffle cutout dia.:	**151 mm**
Mounting holes:	**6**
Depth:	**78.6 mm**
Net weight:	**1.61 kg**

Ordering codes:

DR-6-004-8R-B2-C0001

Legacy code: **430E**

Recone kits:

RC430E

In many cases REDCATT produces 4, 8 and 16 ohm versions — indicate what impedance you need in your request.

Frequency response & Impedance

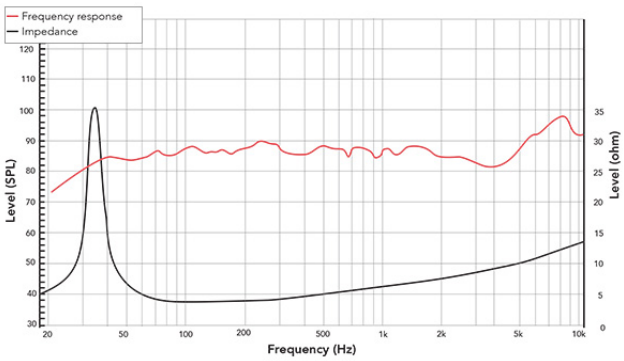

Frequency response measured on IEC baffle

2D drawing

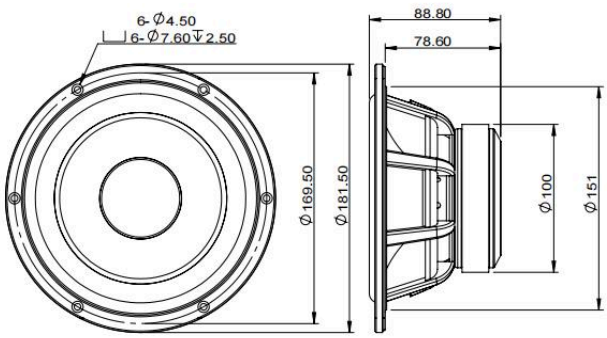

info@redcatt.net

www.redcatt.net