1.8" 180NCD

Compression Driver

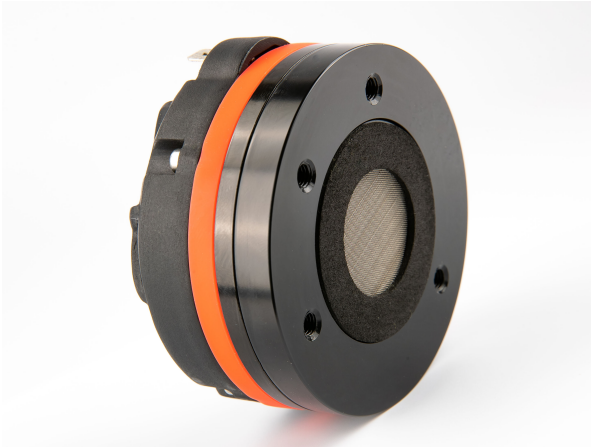

Key features:

- **VERY COMPACT DESIGN**
- **POWERFUL NEODYMIUM MAGNETIC CIRCUIT**
- **BEST USE IN HIGH PERFORMING SPEAKER SYSTEMS AND ARRAYS**

Design notes:

The 180NCD is a high performance high frequency device ideal for professional loudspeaker systems. In a ultra compact size, the driver's neodymium based magnetic circuit provides a robust, high force BL field providing precision control of the Polyimide diaphragm assembly. The unit delivers extended frequency response and high power handling through 1.0 inch exit throat. The suspension has designed and FEM optimized venting features to lover the harmonic distortion. The venting holes also improves the control over the dome movements at low frequencies. REDCATT has developed unique phase plug. Phase plug is FEM optimized to lower the distortion artifacts at mid frequencies.

180NCD ultra compact design ensures the driver can be used in enclosure designs where the space is very limited, such as line array systems.

Redcatt has focused on designing an optimized neodymium based magnetic circuit capable of delivering the highest level of performance and value. This effort has resulted in a device that offers uncompromising performance featuring high efficiency, exceptional transient response and controlled distortion characteristics, all that in extremely compact size.

Specifications:

General specs	
Nominal Diameter:	1.8 "
Rated Impedance:	16 ohm
Power handling	
AES Power:	40 watts
Program Power:	80 watts
Peak Power:	160 watts
Voice Coil	
Diameter:	45.7 mm
Winding wire:	CCAR
Former:	Nomex
Winding height:	2.9 mm

T/S Parameters	
Resonant frequency:	1100 Hz
Re:	12 ohm
Sensitivity:	109.5 dB

Design details	
Dome Material:	PEN
Surround material:	N/A
Magnet material:	Neodymium
Overall diameter:	75 mm
Bolt circle diameter:	57 mm
Mounting holes:	4
Depth:	46.5 mm
Net weight:	0.55 kg

Ordering codes:

CD-1.8-004-16R-B2-C0001

Legacy code: **180NCDX16-086B**

Recone kits:

RC180NCDX16-086B

In many cases REDCATT produces 4, 8 and 16 ohm versions — indicate what impedance you need in your request.

Frequency response & Impedance

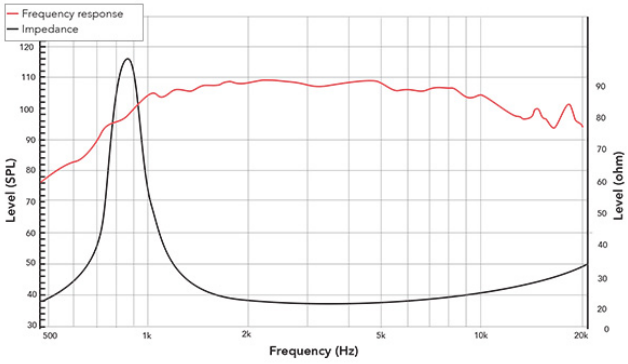

Frequency response measured on IEC baffle

2D drawing

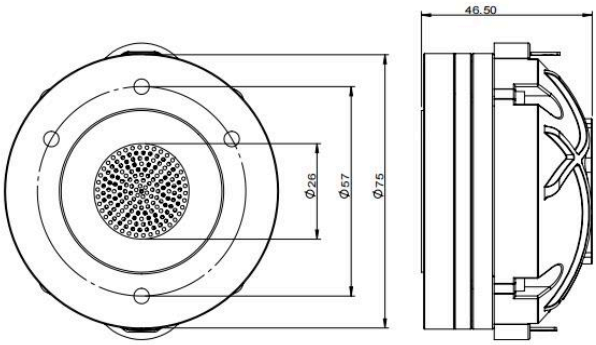

info@redcatt.net

www.redcatt.net