12" 121FIND

Mid-Woofer

REDCATT

Key features:

- **EXTENDED FREQUENCY RESPONSE**
- **PROVEN COST EFFECTIVE DESIGN**
- **NOMEX SPIDER, WATER-REPELLENT & NON-FLAMMABLE PAPER CONE**

Design notes:

The 121FIND is a high efficiency, (96 dB 1watt/ 1 meter) 12inch woofer with incredibly linear frequency response characteristics, high power handling capability while generating low harmonic distortion artifacts. 121FIND uses lightweight cone which movement is controlled by “M” shaped surround. Pistonic behavior and the long term stability
Is supported by Nomex spider. The woofer cone is treated to withstand harsh environments and high humidity.

The 121FIND was design for its best use in the 2-way applications, where excellent midrange response is required. Speaker provides good low frequency extension and delivers seizable amounts of low frequencies.

The metal parts in the speaker are coated and tested to ensure extreme weatherization protection.

Specifications:

General specs	
Nominal Diameter:	12 "
Rated Impedance:	4 ohm
Power handling	
AES Power:	250 watts
Program Power:	500 watts
Peak Power:	1000 watts
Voice Coil	
Diameter:	50.8 mm
Winding wire:	CCAW
Former:	Glass Fiber
Winding height:	11.7 mm

T/S Parameters	
Resonant frequency:	59 Hz
Re:	3.1 ohm
Qes:	0.56
Qms:	7.34
Qts:	0.52
Vas:	59.1 liters
Sd:	531 cm²
Sensitivity:	96.4 dB
Mms:	49.1 grams
Bl:	10.2
Le:	0.32 mH

Design details	
Surround Material:	fabric
Cone material:	Paper GF
Spider:	Nomex
Plate thickness:	8 mm
Overall diameter:	320 mm
Bolt circle diameter:	302 mm
Baffle cutout dia.:	282 mm
Mounting holes:	8
Depth:	124 mm
Net weight:	4.6 kg

Ordering codes:

DR-12-012-4R-B2-C0001

Legacy code: **121FINDX4-233**

Recone kits:

RC121FINDX4-233

In many cases REDCATT produces 4, 8 and 16 ohm versions — indicate what impedance you need in your request.

Frequency response & Impedance

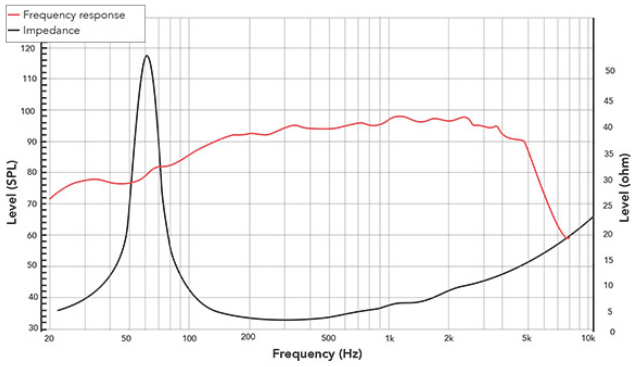

Frequency response measured on IEC baffle

2D drawing

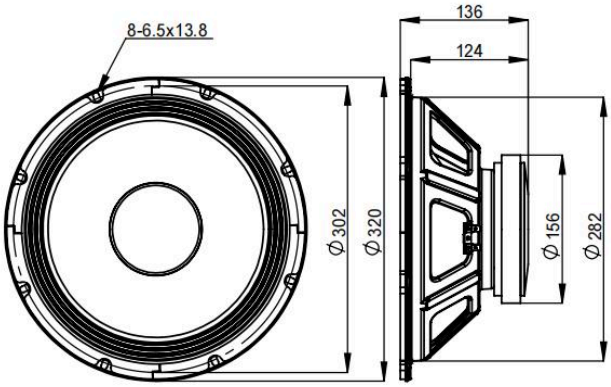

info@redcatt.net

www.redcatt.net